WARNING:

- **MAKE SURE TO TURN OFF POWER & DE-ENERGIZE ENERGY SOURCE TO THE MIXER.**
- **FOLLOW LOCK-OUT PROCEDURE BEFORE ANY SERVICE IS PERFORMED.**
- **WHERE APPLICABLE, FOLLOW CONFINED SPACE ENTRY PROCEDURES AND OBTAIN PERMITS IF NEEDED.**
- **PINCH POINTS & SHARP EDGES MAY BE LOCATED IN THIS AREA**

Impeller Installation - Set Screw

If impellers are not permanently mounted to the mixer shaft, then they will need to be installed on the mixer shaft.

Determine the proper mounting location. In general, the bottom of the shaft should be between 0.5X impeller diameter to 1.5X impeller diameter off the bottom of the tank. For dual impellers, refer back to the quote or Approval Drawing for spacing. As a general rule, in gear drive models, the second impeller should be about 2X impeller diameters from the lower impeller and on direct drive models about 5X impeller diameters from the lower impeller.

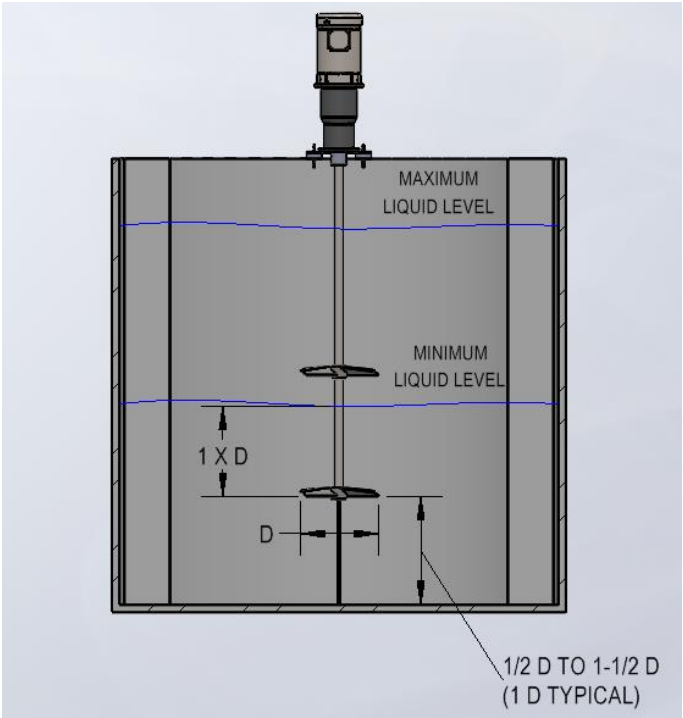

Slide the impeller(s) over the shaft until in their proper location(s). Snug the first set screw to locate the impeller. Snug the second set screw (if equipped) securely to the shaft. *The use of a process compatible service removable thread-locking compound is recommended where acceptable*. Remove the first set screw and apply service removeable thread-locker (Blue 242 Loctite or similar) to the threads. Reinstall first set screw onto shaft, tighten and torque as required **(see Torque Chart – FM-1004 or FM-1006 Installation Sections)**. Remove the second set screw and apply service

removeable thread-locker compound to the threads. Reinstall second set screw onto shaft, tighten and torque as required. *NOTE: Some thread-locking compounds act as a lubricant, requiring torque settings to be adjusted. Follow manufacturer's instructions for this adjustment.*

If use of a thread-locking compound is unacceptable, tighten set screws and torque as required **(see Torque Chart – FM-1004 or FM-1006 Installation Sections** for recommended dry torque settings).

Repeat these steps for additional impeller(s) as required.

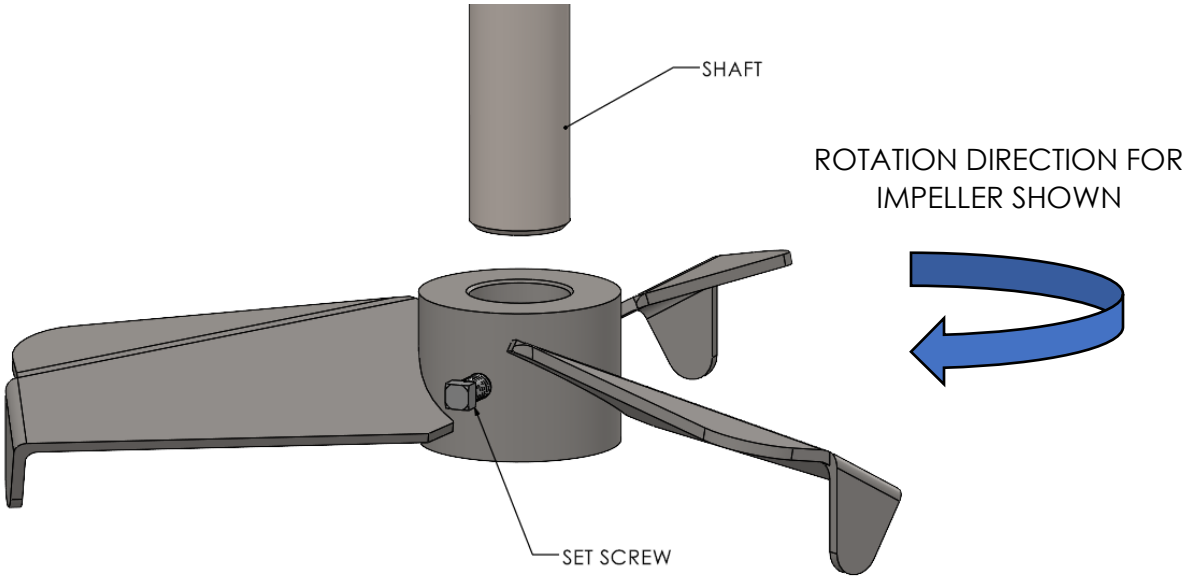

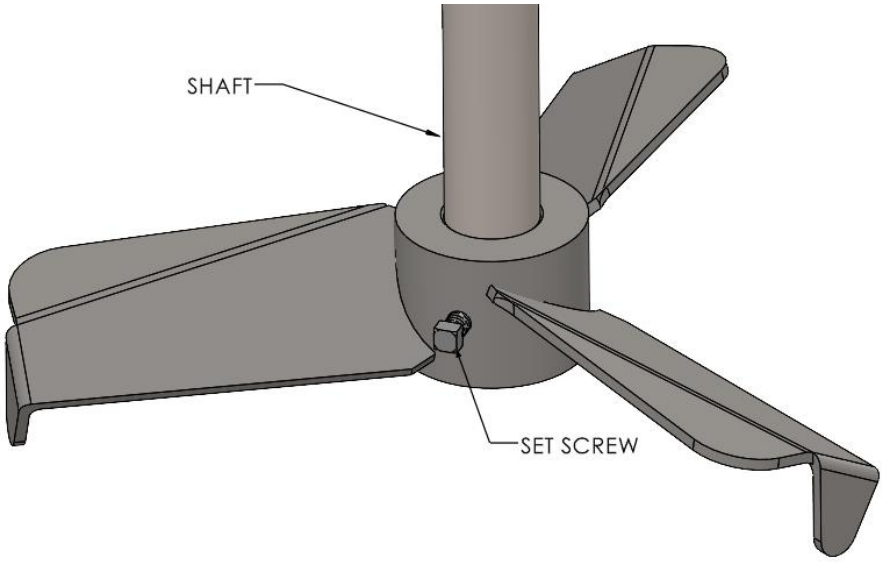

Impeller Installation – Hub & Key

When installing multiple impellers & hubs on a shaft, start with the impeller closest to the drive. If your mixer is equipped with a Captured Key, slide impeller hub over the shaft & go past the slot for the key (start with slot closest to drive for multiple impellers) as shown below. Insert key into slot in shaft & slide the hub over key. Align the keyway in hub with the key. *The use of a process compatible service removable thread-locking compound is recommended where acceptable*. Apply thread-locker (Blue 242 Loctite or similar) to the threads if acceptable, then tighten set screw down on flat on key as shown below. Torque screw to specification per screw size **(see Torque Chart – FM-1004 or FM-1006 Installation Sections)**.

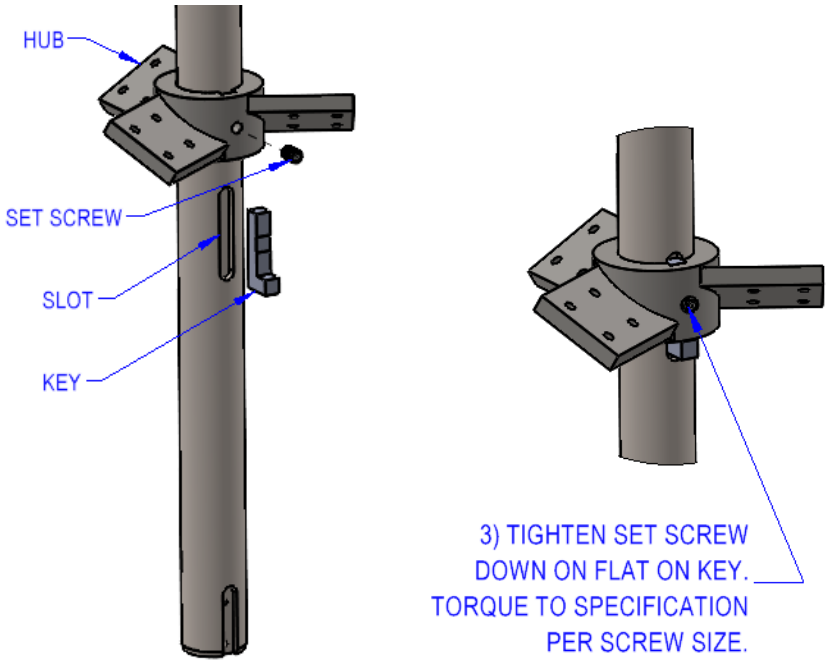

Hub sectioned to show set screw on flat on key in image below

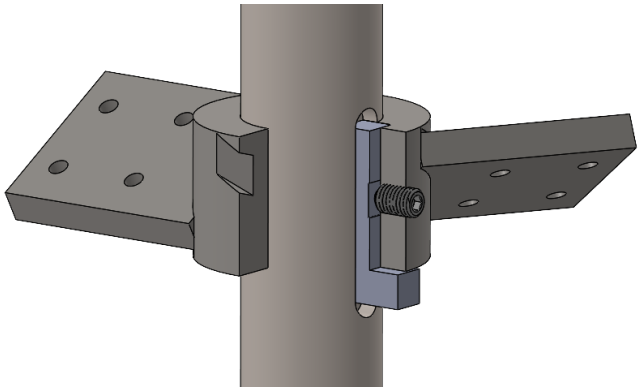

Impeller Installation

If your mixer is equipped with a Bolted Key, slide impeller hub on the shaft & go past the slot for the key as shown below. Insert key into slot in shaft & attach key with 2-socket head cap screws. Align the keyway in hub with the key & slide hub over key. *The use of a process compatible service removable thread-locking compound is recommended where acceptable*. Apply thread-locker (Blue 242 Loctite or similar) to the threads if acceptable, then tighten set screw down on flat on key as shown below. Torque screw to specification per screw size **(see Torque Chart – FM-1004 or FM-1006 Installation Sections)**.

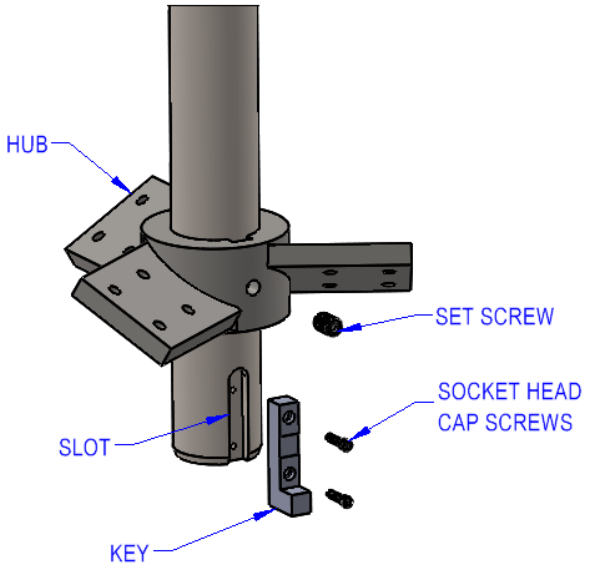

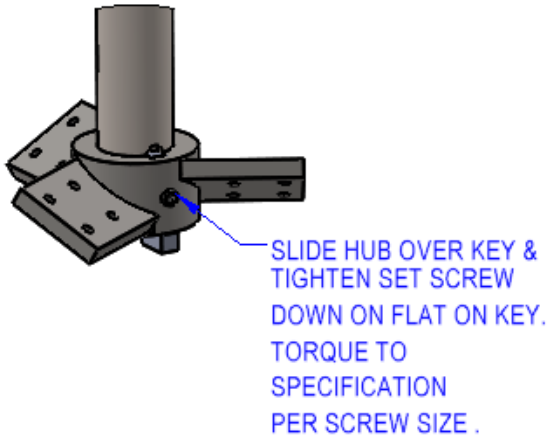

Hub sectioned to show set screw on flat on key in image below

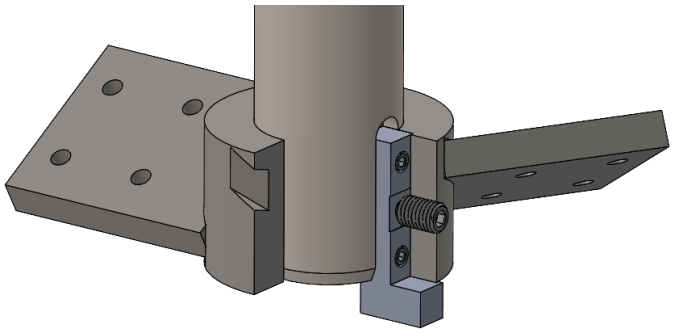

Impeller Installation – Bolted Impeller Blades

This manual section will cover Bolted Impeller Blade Installation for the following impeller models: PBT; PF3; PV3; PV4; & RP4 Radial Impellers. Below are images showing the impeller hubs for the bolted blade impeller models.

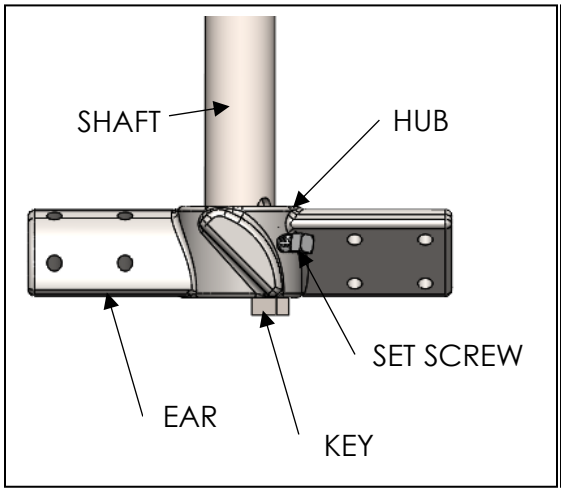

PBT IMPELLER HUB

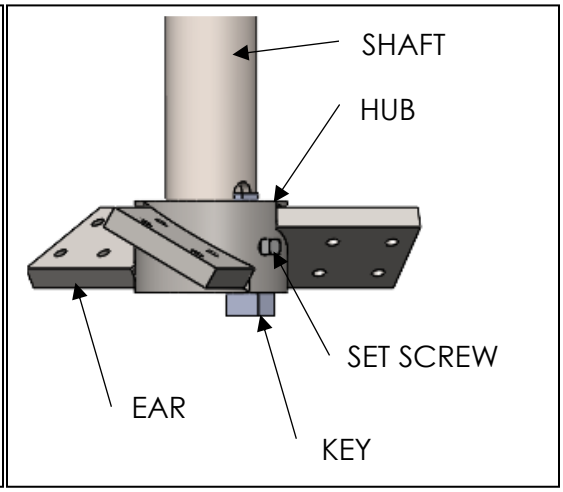

PF3 IMPELLER HUB

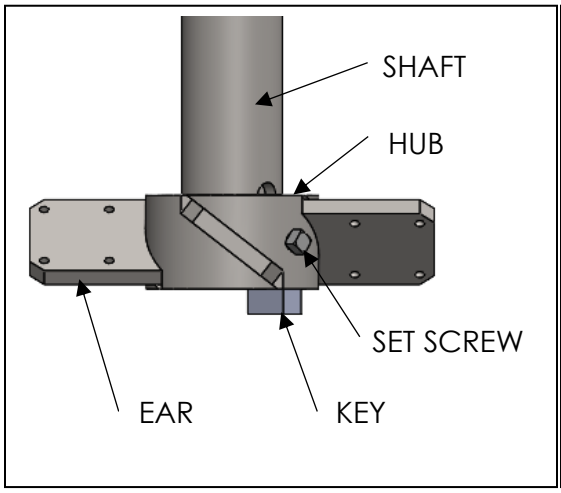

PV3 & PV4 IMPELLER HUB

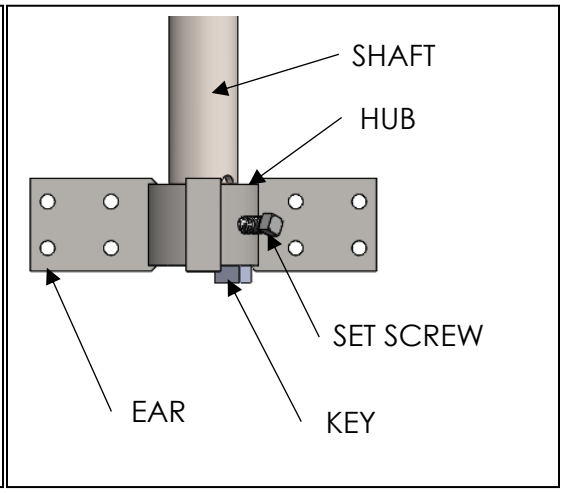

RP4 IMPELLER HUB

Impeller Installation - Rotation & Pumping Direction

Refer to your mixer Approval or As Manufactured Drawing to determine the impeller rotation and pumping direction before bolting blades to the hub ears. Impeller rotation is determined as viewed from the mixer drive. **The Blades are always backed by the Hub's ears as determined by rotation direction.**

DAMAGE IS TO THE MIXER MAY OCCUR IF THE BLADES ARE MOUNTED ON THE WRONG SIDE OF THE HUB'S EARS OR ROTATION IS INCORRECT.

Below are the 4 possible impeller configurations for the PBT:

DOWN PUMPING – CW ROTATION	UP PUMPING – CW ROTATION	UP PUMPING – CCW ROTATION	DOWN PUMPING – CCW ROTATION
BLADE UNDER EAR 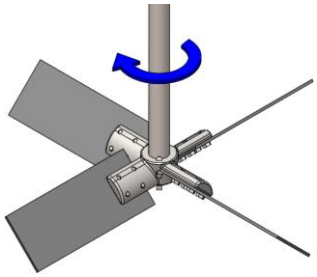 Typical configuration	BLADE ABOVE EAR 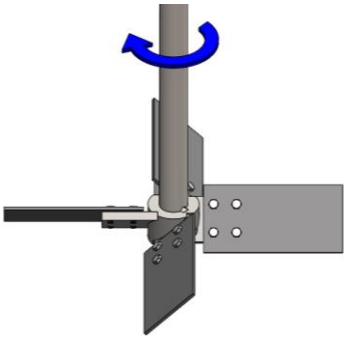	BLADE ABOVE EAR 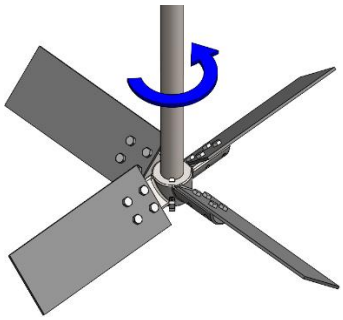	BLADE UNDER EAR 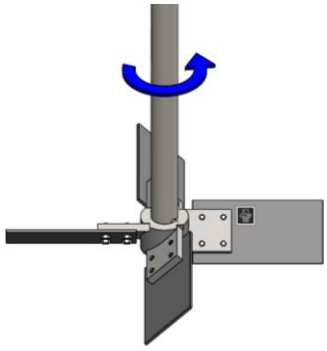

Below are the 4 possible impeller configurations for the PF3:

DOWN PUMPING – CW ROTATION	UP PUMPING – CW ROTATION	UP PUMPING – CCW ROTATION	DOWN PUMPING – CCW ROTATION
BENT CORNER ON TOP, BLADE UNDER EAR 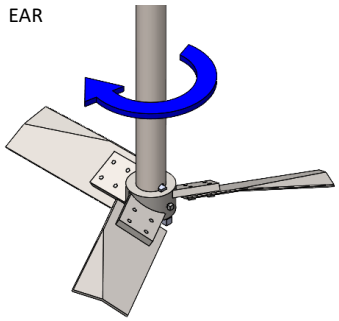 Typical configuration	BENT CORNER ON BOTTOM, BLADE ABOVE EAR 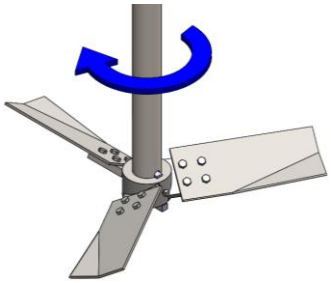	BENT CORNER ON BOTTOM, BLADE ABOVE EAR 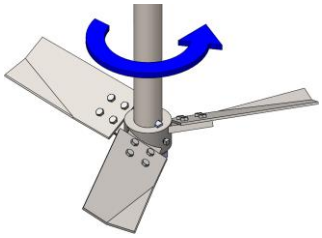	BENT CORNER ON TOP, BLADE UNDER EAR. 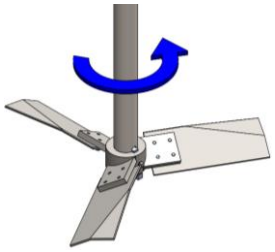

Impeller Installation

Below are the 4 possible impeller configurations for the PV3 & PV4:

DOWN PUMPING – CW ROTATION	UP PUMPING – CW ROTATION	UP PUMPING – CCW ROTATION	DOWN PUMPING – CCW ROTATION
BENT CORNER ON TOP, BLADE UNDER EAR 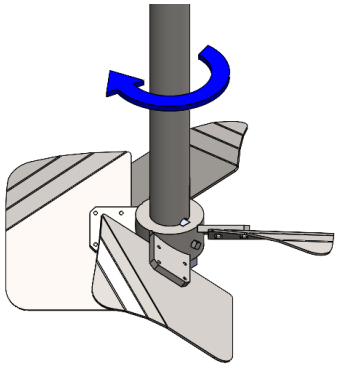 Typical configuration	BENT CORNER ON BOTTOM, BLADE ABOVE EAR 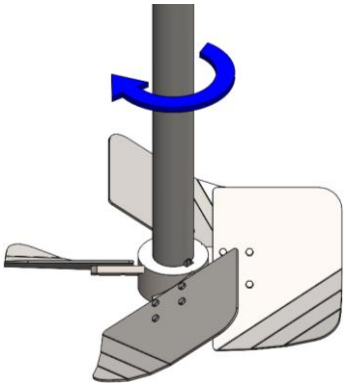	BENT CORNER ON BOTTOM, BLADE ABOVE EAR 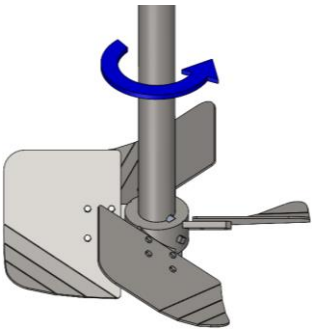	BENT CORNER ON TOP, BLADE UNDER EAR. 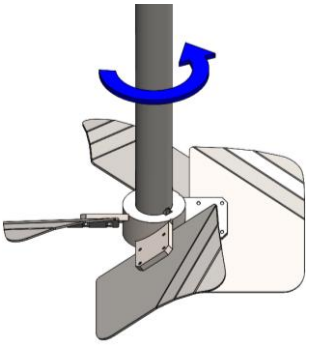

Below are the 2 possible impeller configurations for the RP4 (Radial):

CW ROTATION	CCW ROTATION
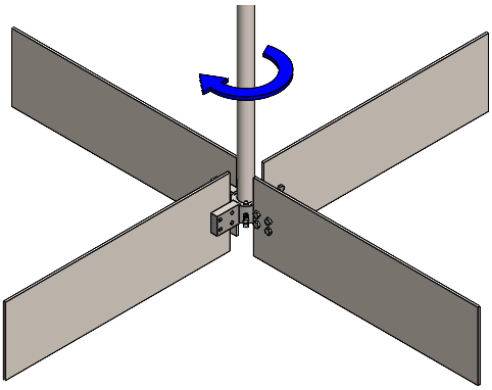	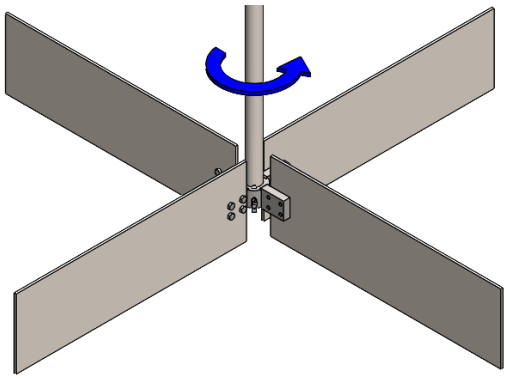

Impeller Installation – Bolting Blades

Attach the blades to the hub's ears using the provided bolts. Apply Blue Loctite 242 or similar service removable thread locker to the bolt and tighten to the appropriate value per screw size **(see Torque Chart – FM-1004 or FM-1006 Installation Sections)**.

PBT BLADE ATTACHMENT

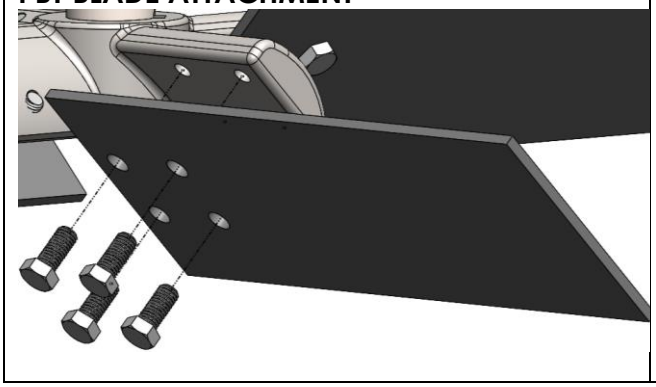

PF3 BLADE ATTACHMENT

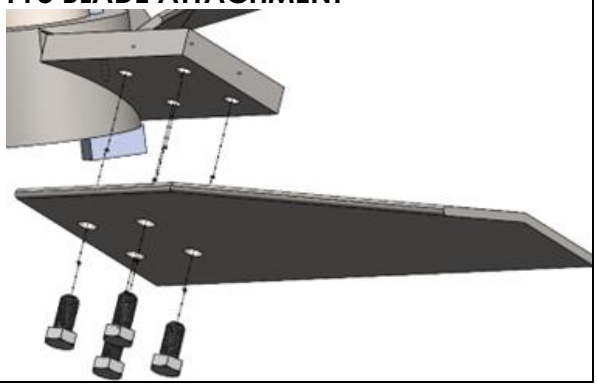

PV3 & PV4 BLADE ATTACHMENT

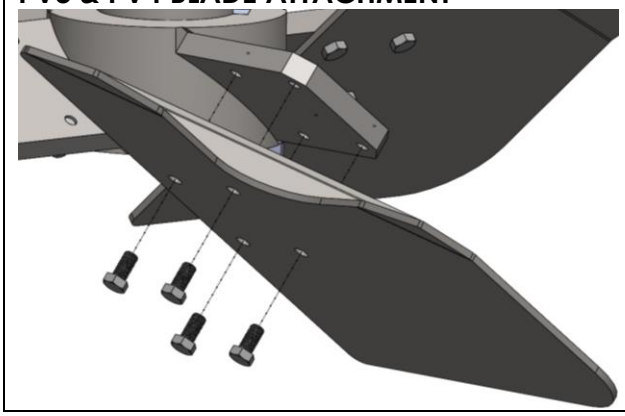

RP4 BLADE ATTACHMENT